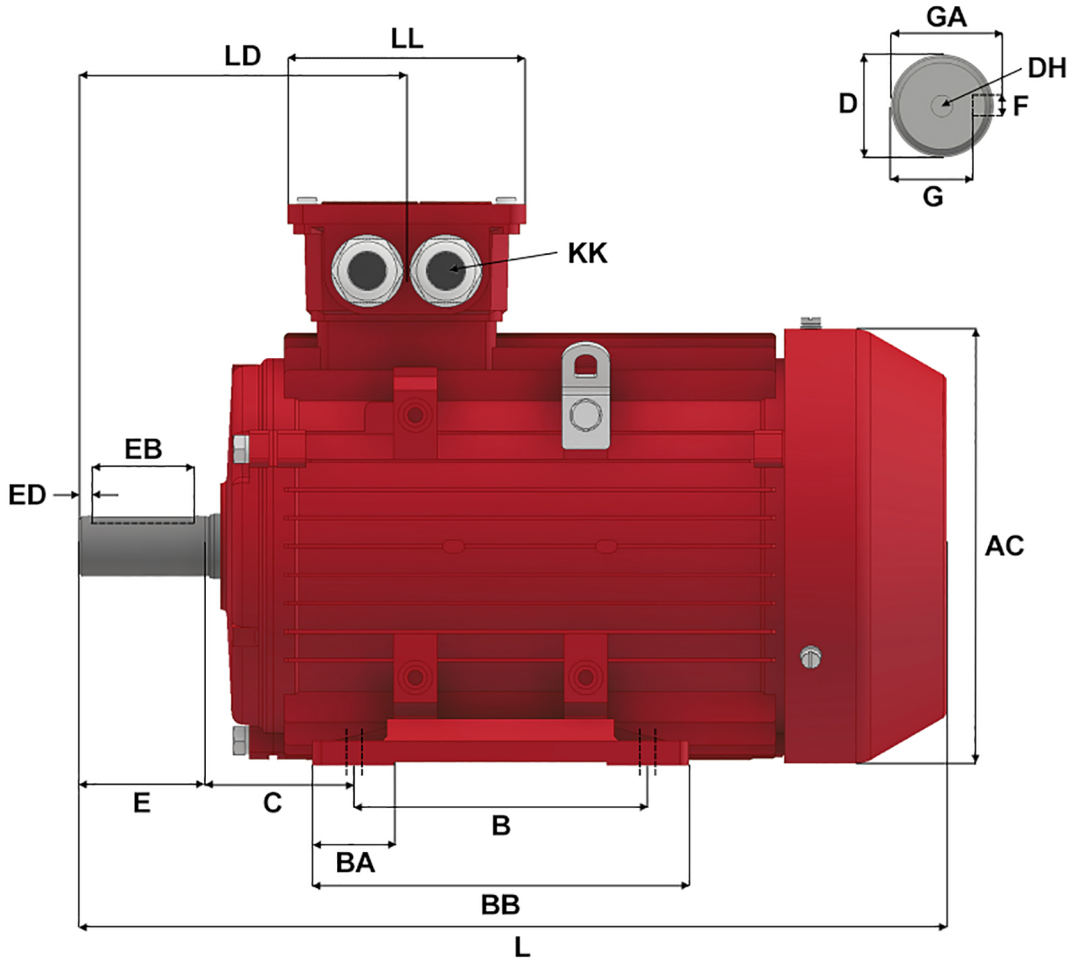

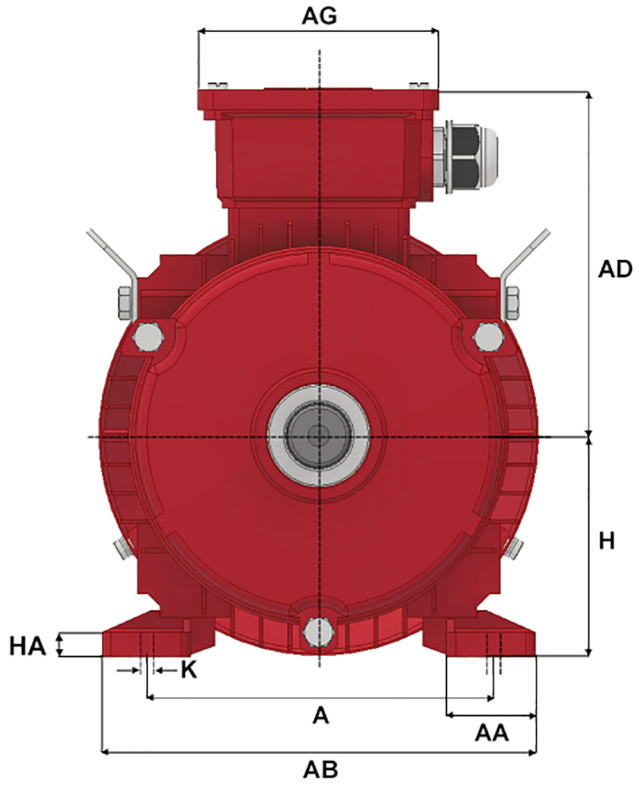

Version: 1JLEM	Revised: 09-11-2019	HP	RPM	FRAME	ENCLOSURE	IJA112M3-2-B3
Customer is responsible in determining that Max Motion product will fit/perform suitably in the intended application		10	3515	112M	TEFC	

A	B	C	D	E	F	G	H	K	L	AA	AB	AC
190	140	70	28	60	8	24	112	12 X 16	400	41	227	230
AD	**AG**	**BA**	**BB**	**DH**	**EB**	**ED**	**GA**	**HA**	**KK (1)**	**KK (2)**	**KK (3)**	**LD**
178	117.5	43	180	M10 X 22	50	5	31	12	M32 X 1.5	3/4'' NPT	-	151.5
LL												
117.5												